Work Order ID 72931

Thursday, August 18, 2011 10:10:00 AM

Item ID: D4045-1
Revision ID:
Item Name: Lug
Start Date: 8/18/2011 **Start Qty:** 10.00
Required Date: 8/22/2011 **Req'd Qty:** 10.00
Reference:

Accept

Setup Start
Stop

Cust Item ID:
Customer:

Run Start
Stop

Approvals: **Process Plan:** MWF **Date:** 11-08-18 **Tooling:** _____ **Date:** _____
QC: _____ **Date:** _____ **SPC (Y/N):** _____ **Date:** _____

Draw Nbr	Revision Nbr
D4045	A

Sequence ID/ Work Center ID	Operation Description	Set Up/ Run Hours	Tool ID	Tool #	Plan Code	Accept Qty	Reject Qty	Reject Number	Insp. Stamp
100 Bandsaw Jeaspa Bandsaw	**Memo** cut blank □1.150" long	0.00 0.00	FK 11/09/19			10	9		
110 HAAS 1 HAAS CNC vertical machine #1	**Memo** mill as per dwg and folio fa887 DWG REV:_____ FOLIO REV:_____ DEBURR	0.00 0.00	RA 11. 9. 19			10	1		

Dart Aerospace Ltd

W/O:		WORK ORDER CHANGES					
DATE	STEP	PROCEDURE CHANGE	By	Date	Qty	Approval Chief Eng / Prod Mgr	Approval QC Inspector

Part No: _____ PAR #: _____ Fault Category: _____ NCR: Yes No DQA: _____ Date: _____

Resolution: _____ Disposition: _____ QA: N/C Closed: _____ Date: _____

NCR:		WORK ORDER NON-CONFORMANCE (NCR)						
DATE	STEP	Description of NC Section A	Corrective Action Section B			Verification Section C	Approval Chief Eng	Approval QC Inspector
			Initial Chief Eng	Action Description Chief Eng	Sign & Date			

NOTE: Date & initial all entries

H:\fFORMS\Quality Assurance\approved QA\NCRWO RevE

Work Order ID 72931

Thursday, August 18, 2011 10:10:00 AM

Item ID: D4045-1 **Accept** **Setup Start** **Stop**

Revision ID:

Item Name: Lug

Start Date: 8/18/2011 **Start Qty:** 10.00 **Cust Item ID:**

Required Date: 8/22/2011 **Req'd Qty:** 10.00 **Customer:**

Reference:

Run Start **Stop**

Approvals: **Process Plan:** _____ **Date:** _____ **Tooling:** _____ **Date:** _____

QC: _____ **Date:** _____ **SPC (Y/N):** _____ **Date:** _____

Sequence ID/ Work Center ID	Operation Description	Set Up/ Run Hours	Tool ID	Tool #	Plan Code	Accept Qty	Reject Qty	Reject Number	Insp. Stamp
120	QC2- Inspect parts off machine FAI/FAIB	0.00							
QC	Memo	0.00	Ra 11-2-19			10	ϕ		
Quality Control									
130	QC8- Inspect parts - second check	0.00							
QC	Memo	0.00	B.A 11/09/19			10	ϕ		
Quality Control									
140	Identify as per dwg & Stock Location: ST [redacted]. wa.	0.00							
Packaging	Memo	0.00			(TA)	SP	11-09-20		
Packaging									

Dart Aerospace Ltd

W/O:		WORK ORDER CHANGES					
DATE	STEP	PROCEDURE CHANGE	By	Date	Qty	Approval Chief Eng / Prod Mgr	Approval QC Inspector

Part No: _____ PAR #: _____ Fault Category: _____ NCR: Yes No DQA: _____ Date: _____

Resolution: _____ Disposition: _____ QA: N/C Closed: _____ Date: _____

NCR:		WORK ORDER NON-CONFORMANCE (NCR)						
DATE	STEP	Description of NC Section A	Corrective Action Section B			Verification Section C	Approval Chief Eng	Approval QC Inspector
			Initial Chief Eng	Action Description Chief Eng	Sign & Date			

* NOTE: Date & initial all entries

H:\fFORMS\Quality Assurance\approved QA\NCRWO RevE

Work Order ID 72931

Thursday, August 18, 2011 10:10:00 AM

Item ID: D4045-1 **Accept** **Setup** **Start**

Revision ID: **Stop**

Item Name: Lug

Start Date: 8/18/2011 **Start Qty:** 10.00 **Cust Item ID:**

Required Date: 8/22/2011 **Req'd Qty:** 10.00 **Customer:**

Reference:

Run **Start**

Approvals: **Process Plan:** _____ **Date:** _____ **Tooling:** _____ **Date:** _____

Stop

QC: _____ **Date:** _____ **SPC (Y/N):** _____ **Date:** _____

Sequence ID/ Work Center ID	Operation Description	Set Up/ Run Hours	Tool ID	Tool #	Plan Code	Accept Qty	Reject Qty	Reject Number	Insp. Stamp
150	QC21- Final Inspection - Work Order Release	0.00							
QC Quality Control	**Memo**	0.00							

11/9/20

11-09-20 (10)

Dart Aerospace Ltd

W/O:		WORK ORDER CHANGES					
DATE	STEP	PROCEDURE CHANGE	By	Date	Qty	Approval Chief Eng / Prod Mgr	Approval QC Inspector

Part No: _____ **PAR #:** _____ **Fault Category:** _____ **NCR:** Yes No **DQA:** _____ **Date:** _____

Resolution: _____ **Disposition:** _____ **QA: N/C Closed:** _____ **Date:** _____

NCR:		WORK ORDER NON-CONFORMANCE (NCR)						
DATE	STEP	Description of NC Section A	Corrective Action Section B			Verification Section C	Approval Chief Eng	Approval QC Inspector
			Initial Chief Eng	Action Description Chief Eng	Sign & Date			

NOTE: Date & initial all entries

H:\FORMS\Quality Assurance\approved QA\NCRWO RevE

Picklist Print

Thursday, August 18, 2011 10:09:58 AM

Work Order ID: 72931

Parent Item: D4045-1

Parent Item Name: Lug

Start Date: 8/18/2011 **Required Date:** 8/22/2011

Start Qty: 10.00 **Required Qty:** 10.00

Comments: IPP Rev:A as per dwg revA DD 10.02.18 verified byEC

Component Item ID/ Item Name	Replacement Item ID	Mfg/ Purch	Bin Item	Primary Location	Last Location	Route Seq ID	Unit of Measure	Qty on Hand	Qty per Kit	Total Qty	Qty Issued	Date Issued	Status
M304B1.000X1.000 304 bar 1.00 x 1.00		Purchased	No			100	f	3.1986	0.0951	1.001053	FK	11/09/19	

Location	Loc Qty	Loc Code
MAT050	3.1986	
113290	1.047	
117130	2.1516	

1.42

Dart Aerospace Ltd

W/O:		WORK ORDER CHANGES					
DATE	STEP	PROCEDURE CHANGE	By	Date	Qty	Approval Chief Eng / Prod Mgr	Approval QC Inspector

Part No: _____ PAR #: _____ Fault Category: _____ NCR: Yes No DQA: _____ Date: _____

Resolution: _____ Disposition: _____ QA: N/C Closed: _____ Date: _____

NCR:		WORK ORDER NON-CONFORMANCE (NCR)						
DATE	STEP	Description of NC Section A	Corrective Action Section B			Verification Section C	Approval Chief Eng	Approval QC Inspector
			Initial Chief Eng	Action Description Chief Eng	Sign & Date			

NOTE: Date & initial all entries

DART AEROSPACE LTD	Work Order:	72931
Description: Lug	Part Number:	D4045-1
Inspection Dwg: D4045 Rev: A		Page 1 of 1

FIRST ARTICLE INSPECTION CHECKLIST

Drawing Dimension	Tolerance	Actual Dimension	Accept	Reject	Method of Inspection	Comments
1.03	+/- .030	1.025	✓		Vern	EC-8
.75	+/- .030	.749	✓		"	"
.713	+/- .010	.712	✓		"	"
.63	+/- .030	.628	✓		"	"
.25	+/- .030	.248	✓		"	"
.25	+/- .030	.249	✓		"	"
.13	+/- .030	.127	✓		"	"
Ø.257	+.005/-.001	.257	✓		"	"
R.31	+/- .030	.3125	✓		R6	ref.
R .03	+/- .030	.03	✓		"	"

Measured by:	F.K. / JL RP	Audited by:	D.A	Preliminary Approval:	
Date:	11/09/19	Date:	11/09/19	Date:	

Rev	Date	Change	Revised by	Approved
E	10.04.14	Added preliminary approval	KJ	

10.04.15

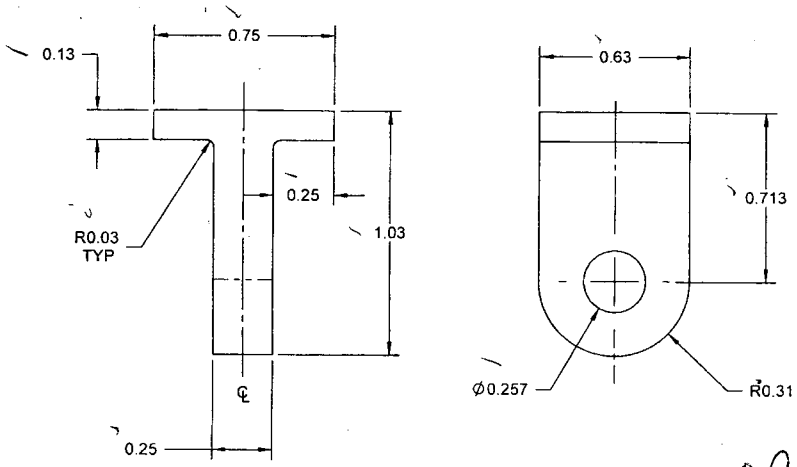

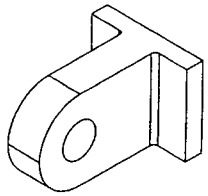

#72931

D4045-1 LUG

RELEASED
2010-02-16

NOTES:
1) MATERIAL: AISI 304/316 STAINLESS STEEL BAR, PER ASTM A276 PER DART SPEC. M304B
2) FINISH: NONE
3) TOLERANCES: PER DART QSI 018 UNLESS OTHERWISE NOTED
4) UNITS: INCHES UNLESS OTHERWISE NOTED
5) BREAK SHARP EDGES: 0.005 TO 0.010 MAX
6) IDENTIFICATION: N/A
7) WEIGHT: 0.05 lbs

REV.	DESCRIPTION	BY	DATE
A	NEW ISSUE	RF	10.01.29

DESIGN	RF	DART AEROSPACE LTD HAWKESBURY, ONTARIO, CANADA	
DRAWN	RF		
CHECKED		DRAWING NO. D4045	REV. A
MFG. APPR.			SHEET 1 OF 1
APPROVED		TITLE LUG	SCALE NTS
DE APPR.			
DATE	10.01.29		

COPYRIGHT © 2010 BY DART AEROSPACE LTD
THIS DOCUMENT IS PRIVATE AND CONFIDENTIAL AND IS SUPPLIED ON THE EXPRESS CONDITION THAT IT IS NOT TO BE USED FOR ANY PURPOSE OR COPIED OR COMMUNICATED TO ANY OTHER PERSON WITHOUT WRITTEN PERMISSION FROM DART AEROSPACE LTD

Dart Aerospace Ltd

W/O:		WORK ORDER CHANGES					
DATE	STEP	PROCEDURE CHANGE	By	Date	Qty	Approval Chief Eng / Prod Mgr	Approval QC Inspector

Part No: _____ **PAR #:** _____ **Fault Category:** _____ **NCR:** Yes No **DQA:** _____ **Date:** _____

Resolution: _____ **Disposition:** _____ **QA: N/C Closed:** _____ **Date:** _____

NCR:		WORK ORDER NON-CONFORMANCE (NCR)						
DATE	STEP	Description of NC Section A	Corrective Action Section B			Verification Section C	Approval Chief Eng	Approval QC Inspector
			Initial Chief Eng	Action Description Chief Eng	Sign & Date			

NOTE: Date & initial all entries

H:\fFORMS\Quality Assurance\approved QA\NCRWO RevE